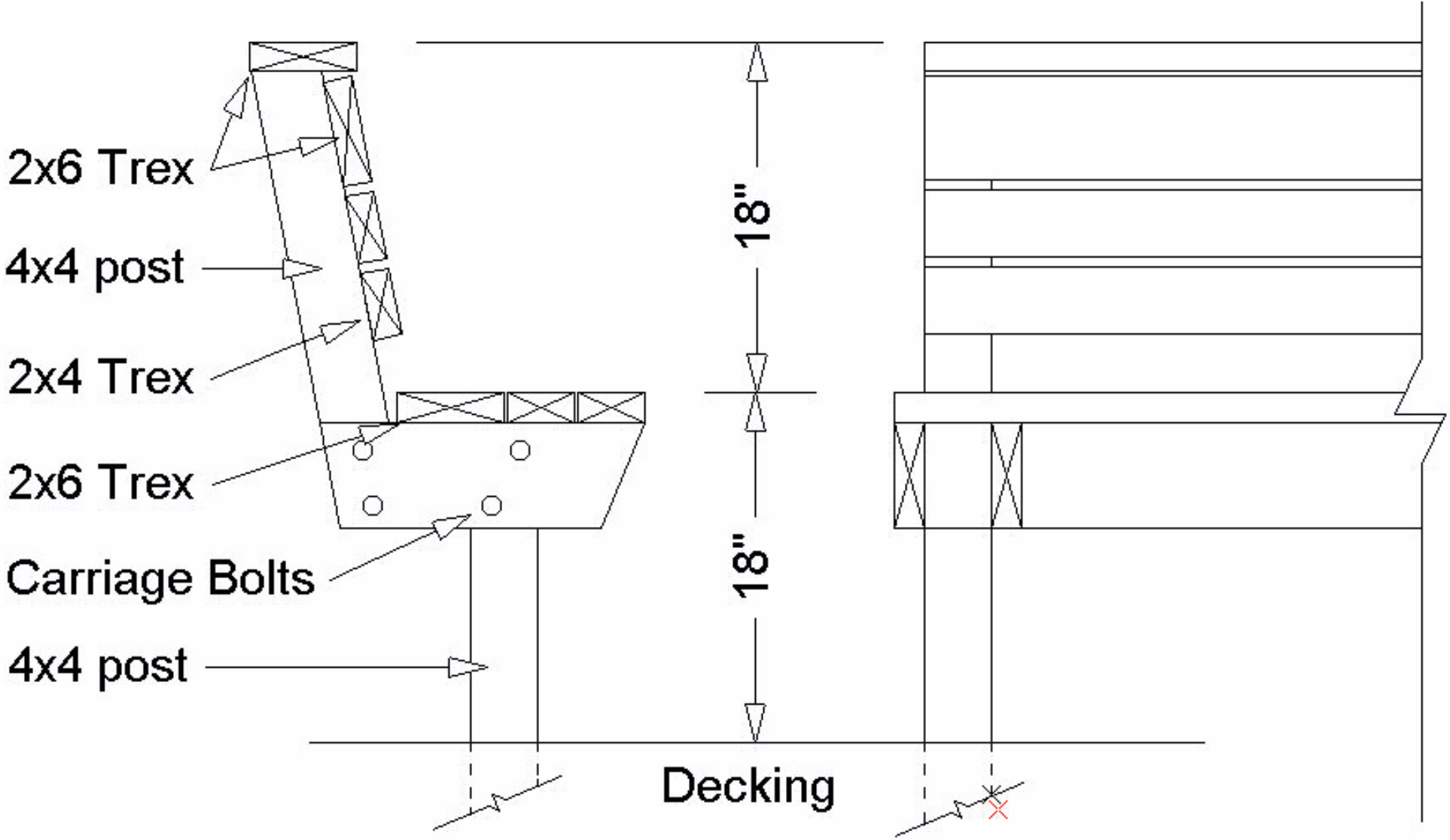

Deck Bench

Scale 1/2=1'0